# BEAM ANGLE
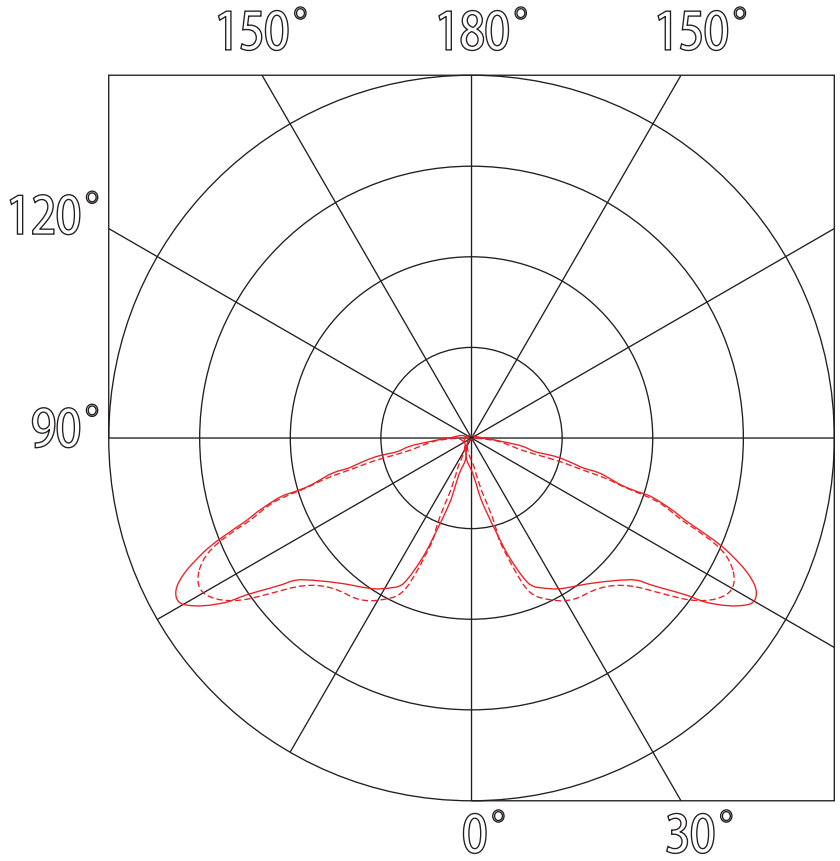
DIMON
TECHNOLOGY