Installation Guidline
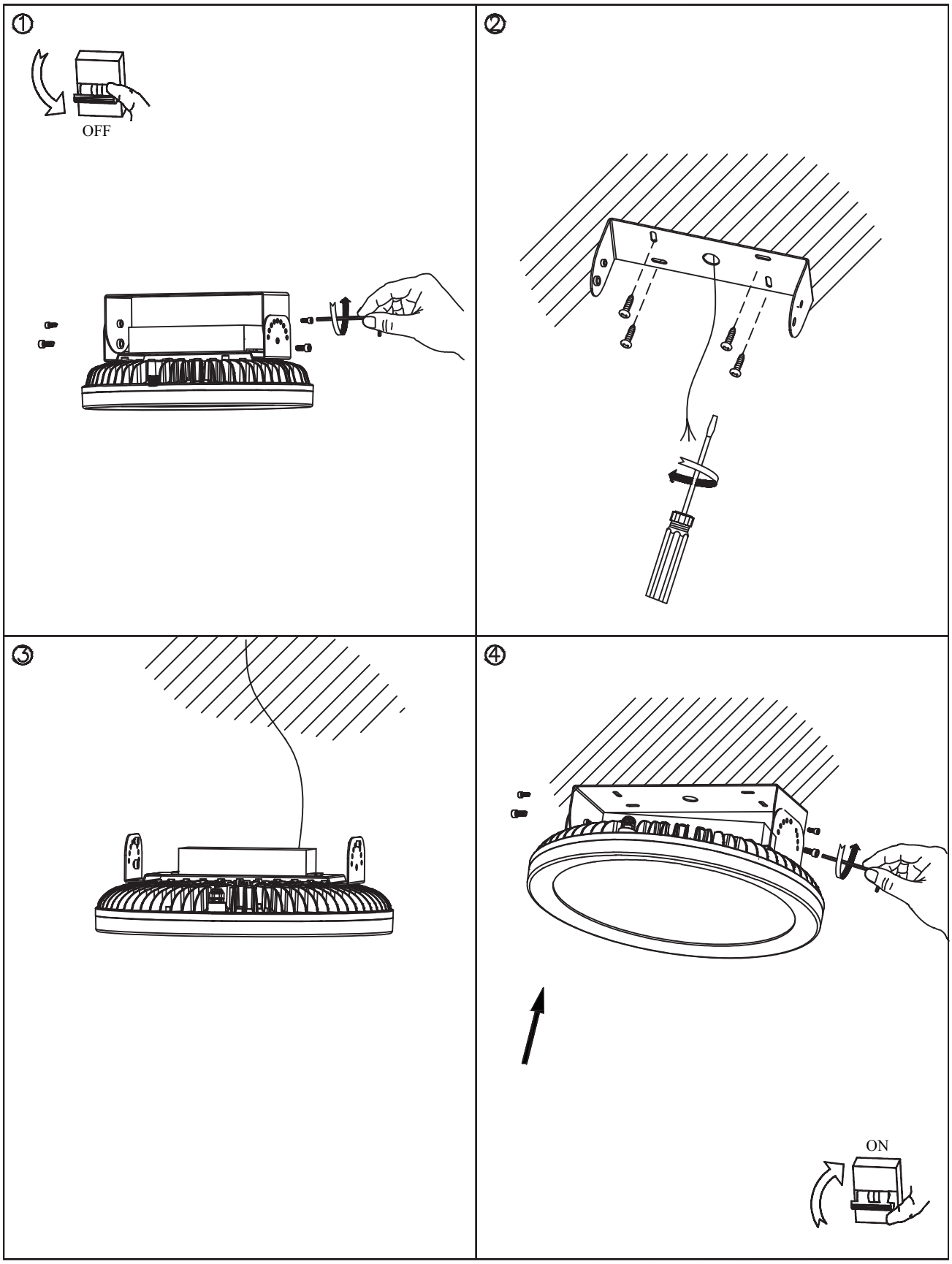
DIMON
TECHNOLOGY