Technical Drawing

DIMON
TECHNOLOGY

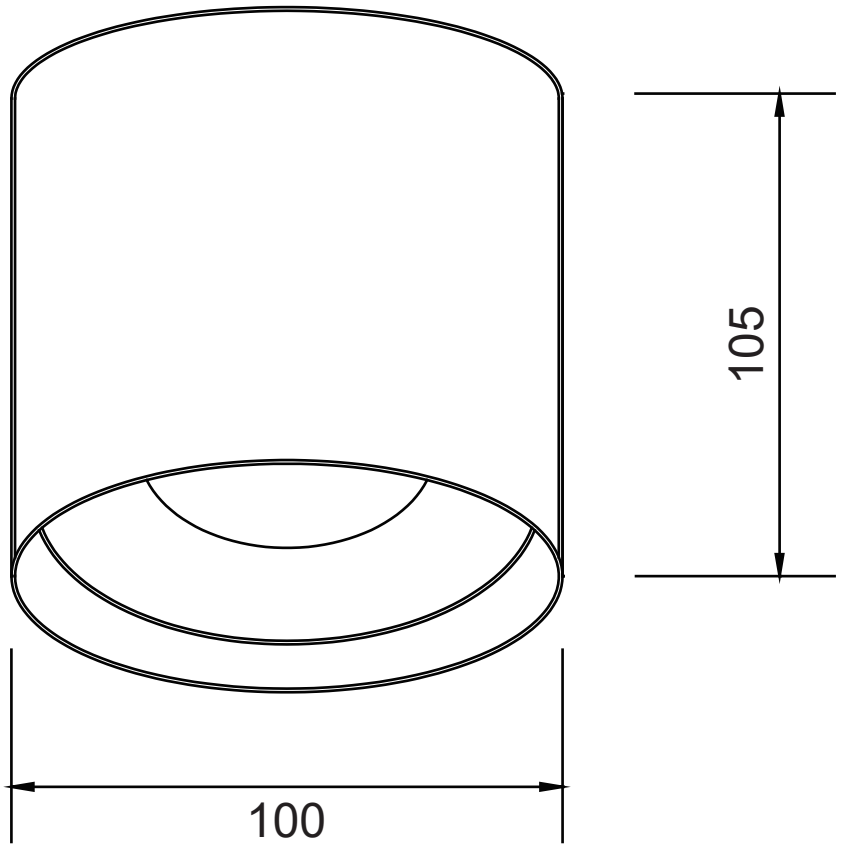

Unit: mm