DIMON
TECHNOLOGY

Technical Datasheet

DRAYE

L117 x W 117 x H:117mm 12W

Housing: die-cast aluminium, powder-coated, designed as heat sink. Anti-glare reflector and diffusor system made of PMMA. LED module: high-power CREE LEDs Array, CRI>80, LM-80 performance approval >50,000 hours. Integrated-Type ELV , 0-10V, DALI, DMX and RDM LED constant current control gear. The Light Head can be rotated to focus the object.

DRAYE

L117 x W 117 x H:117mm 12W

DIMON TECHNOLOGY

Technical Data

Luminaire Type- 安裝方式 Tipo de luminaria	Recessed Mount Spot Light 嵌入式射燈具 Luz empotrada empotrada del punto
Dimension-尺寸-Dimensión	L: 117 x W: 117 x H:117 mm
Cut off Dimension-開孔尺寸-Cortar Dimensión	L: 100 x W: 100 mm
QTY of LEDs-燈珠數量-CANT de LEDs	1 pcs CREE LED Array
Input Voltage-輸入電壓-Voltaje de entrada	AC100-240V 50/60HZ
Power Consumption Max-燈具功率 Consumo de energía Max	12W
LED Driver Type LED驅動款式 Tipo de controlador LED	Integrated-type LED Driver--Refer to LED driver specification 請參閱LED驅動器規格 Consulte la especificación de controlador de LED 1. ON/OFF Switch AC100-240V 50/60HZ 2. ELV Dimming Driver (5-100%) AC 100-120V 50/60Hz or AC 200-240V 50/60HZ 3. 0 -10V Dimming Driver AC100-240V 50/60HZ 4. Dali Dimming Driver AC100-240V 50/60HZ 5. DMX Driver AC100-240V 50/60HZ 6. RDM Driver AC100-240V 50/60HZ 7. Emergency Backup >2 hours or >3 hours @ < 24 charger hours應急電池/Copia de seguridad de emergencia
LED Driver Features 驅動特性 Funciones del controlador de LED	EFFICIENCY (Typ.): >85% MAX. No. of PSUs on 16A CIRCUIT BREAKER: 25 units (circuit breaker of type B) / 40 units (circuit breaker of type C at 230VAC)
Control Protocol-控制協議 Protocolo de Control	0-10V / Dali / DMX 512 / RDM / ZIGBEE Wireless Control
Beam Angle 光束角 ángulo de haz	• 15° • 24° • 36°
Light Source Brand-光源品牌-Fuente de luz de marca	CREE - (Photobiological safety-IEC 62471 'Risk Group 1' (low risk))
"Lumen Maintenance LM-80 Reported by TM-21"	1. L90(10k) = 50,700 hrs 2. L80(10k) > 63,500 hrs 3. L70(10k) > 63,500 hrs
LED Life-LED壽命-La vida del LED	>60,000 hours
Color Temperature -色溫 Temperatura del color	2700K / 3000K / 4000K / 5000K / 6500K
Color Rendering Index-顯色指數 Índice de reproducción cromática	> 80
MacAdam Ellipses Binning 麥克亞當橢圓分級 Mac Adam binning elipse	Standard Deviation Colour Matching < 3 SDCM 標準偏差配色< 3 SDCM Coincidencia de color estándar Desviación < 3 SDCM
Luminaire Efficacy 燈具效率 La eficacia de la luminaria	• 85 Lm/w(2700K), • 85 Lm/w(3000K), • 90 Lm/w(4000K), • 100 Lm/w(5000K), • 100 Lm/w(6500K),
LED Source Luminous Efficacy LED光源光效 Fuente luminosa LED Eficacia	• 100 Lm/w(2700K), • 100 Lm/w(3000K), • 105 Lm/w(4000K), • 120 Lm/w(5000K), • 120 Lm/w(6500K),
Housing materials-外殼材料 Materiales de la carcasa	Die-cast aluminum and acrylic 壓鑄鋁和亞克力 Fundición de aluminio y acrílico
Housing Color 外殼顏色 color de la carcasa	Powder Coating : Sand-white Body with Sand-black Trim 粉末塗料：砂白色燈身採用砂黑色燈框 Recubrimiento en Polvo: Cuerpo blanco arena con borde negro de arena
Ingress Protection-防護等級 Protección de ingreso	IP20 - (IEC 60529)
Environment-使用環境-medio ambiente	Indoor
Operating Humidity -工作濕度 Humedad de funcionamiento	0~90%, non-condensing-不結霜 sin condensación
Operating Temperature Range / 工作溫度範圍 Rango de temperatura de funcion amiento	-30 ℃ / +50 ℃
Country of Design 設計國家	United Kingdom 英國
Country of Origin 產地	PRC 中國
Comply Testing Standard 符合測試標準 Cumplir el estándar de prueba	LED Luminaires: IEC 60598-1 / IEC 60598-2-2 / Photometric data-IES format LED Driver: EN 55015 / IEC 61000-3-2 / IEC 61347-1 / IEC 61347-2-13 / IEC 61547
Certification-認證-Certificación	UK DESIGN CE IP20 LM80 0-10V ZigBee

Project	Fixture#	Date
		Firm

DIMON TECHNOLOGY

Ordering Information

Choose the option that suits your need and write its corresponding code on the appropriate line to form the product code.

Example product code: DRAYE-12W-SW-S-27-MW

DRAYE - 12W - ____ - ____ - ____ MW

Power Consumption | LED Driver Type | BEAM Angle | Color Temperature | Housing Color

Power Consumption		LED Driver Type		BEAM Angle		Color Temperature		Housing Color	
Code	Description	Code	Description	Code	Description	Code	Description	Code	Description
12W	1 x 12W	SW	ON/OFF Switch	N	15°	27	2700K	MW	Matte white body with Matte-blackTrim
		ELV	ELV Leading Edge Control	S	24°	30	3000K		
		AN	Analog 0 -10V Dimming	M	36°	40	4000K		
		DA	DALI Dimming			50	5000K		
		DMX	DMX Dimming			65	6500K		
		RDM	RDM Dimming						
		EM	Emergency Battery						
		ZI	ZIGBEE Wireless Control						

Accessories

Gateway- NANO

INNO-SENSOR-823

INNO-SENSOR-826

Z501-CZ

INNO812

Technical Drawing
GRILLE SPOT LIGHT
DRAYE

DIMON
TECHNOLOGY

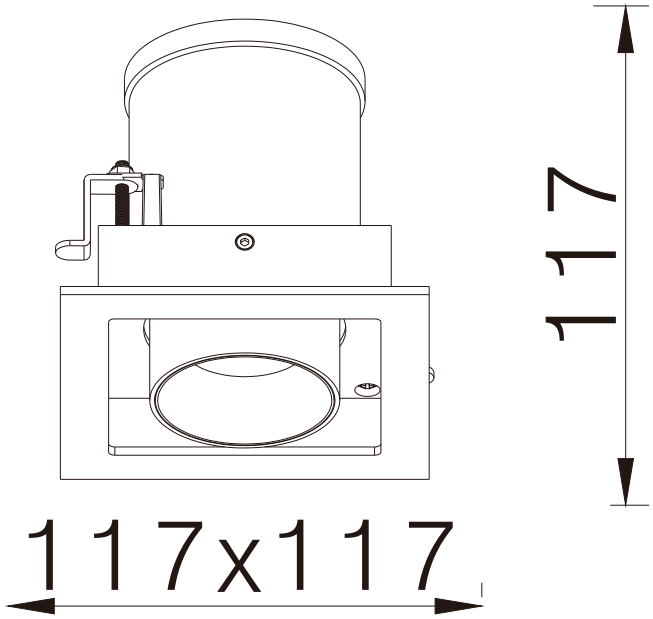

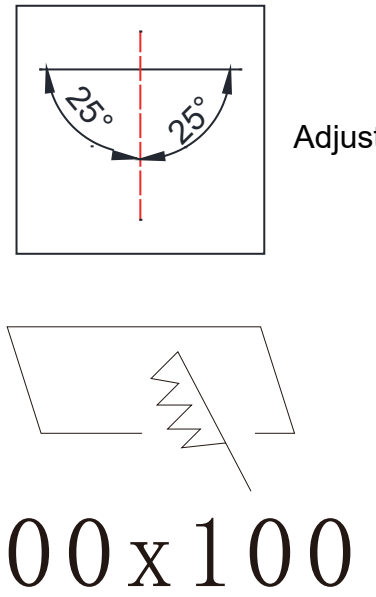

Unit: mm